DTPF4-MDGS08ZSA

4" PRECAST TRENCH DRAIN

R2

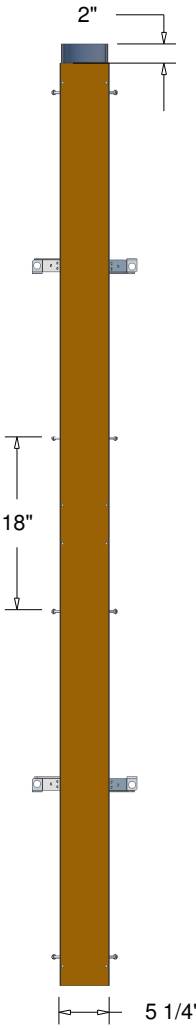

TOP VIEW

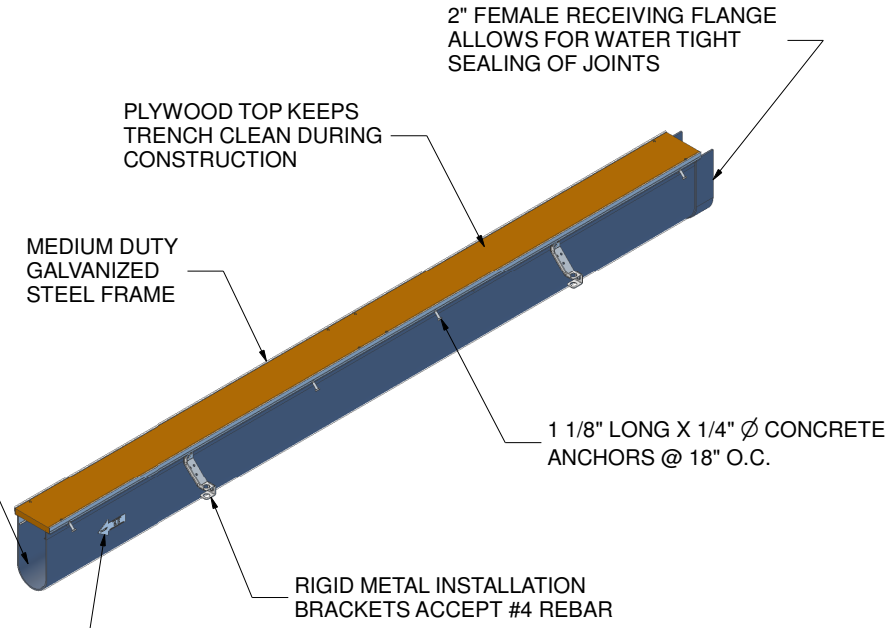

ISOMETRIC VIEW

NOTE:
ALL TRENCHES ARE FACTORY ASSEMBLED AND READY FOR SITE INSTALLATION

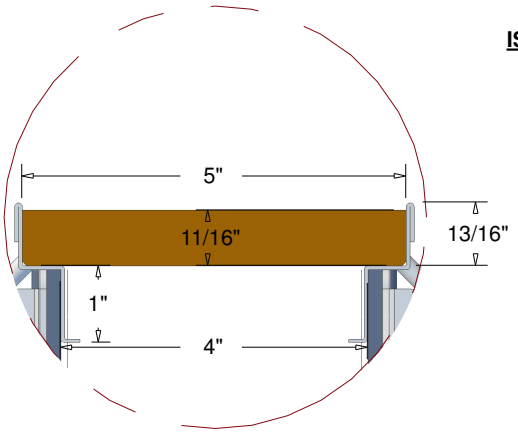

DETAIL A - FRAME PROFILE

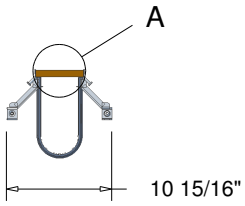

END VIEW

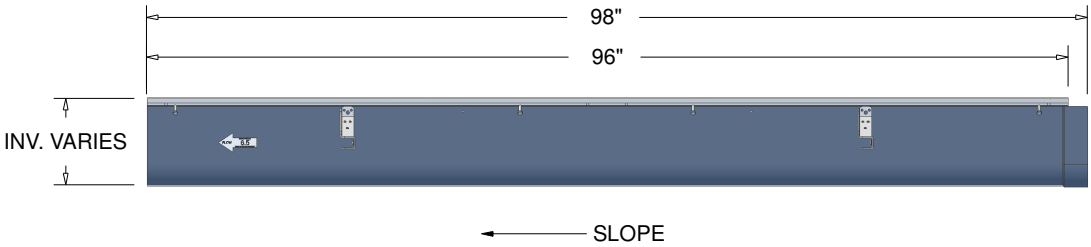

SIDE VIEW

TRENCH MATERIAL	FIBER REINFORCED POLYMER
FRAME MATERIAL	STEEL
FRAME COATING	GALVANIZED
ANCHOR STUDS	1 1/8" X 1/4" ∅
INSTALL DEVICE	RIGID STAMPED METAL FOR #4 BARS
LOAD RATING	MEDIUM DUTY
SLOPE	0.5% TYP (CUSTOM SLOPE AVAILABLE)

STANDARD TOLERANCES
0 = +/-0.25
0.0 = +/-0.25
0.00 = +/- 0.13

Dura Trench

574c Industrial Way N.
Dallas, GA 30132
PH: 770-505-6575
www.trenchdrain.net